Kave Home®

Nadyria

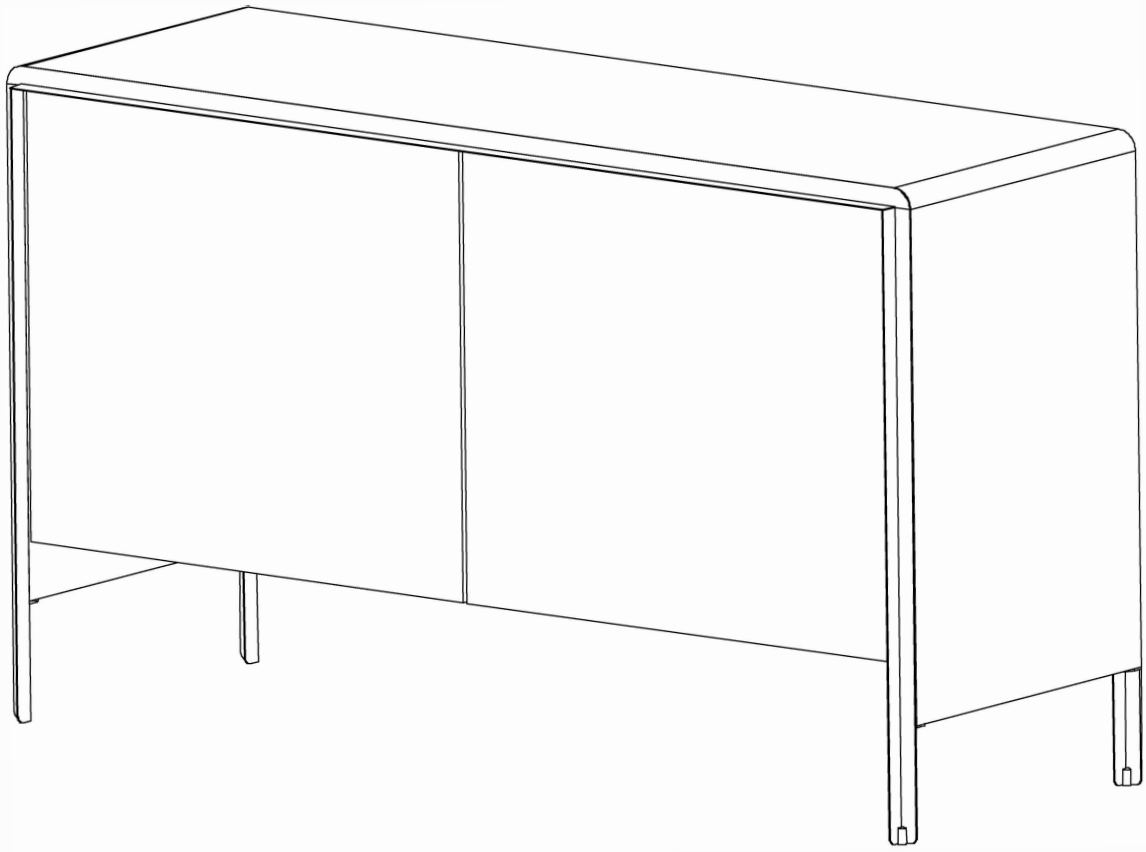

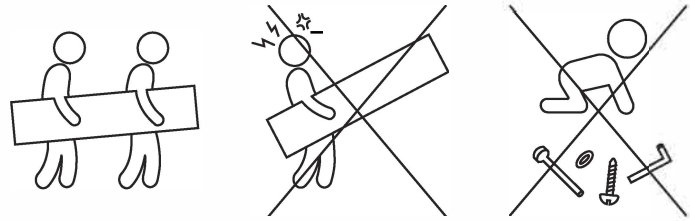

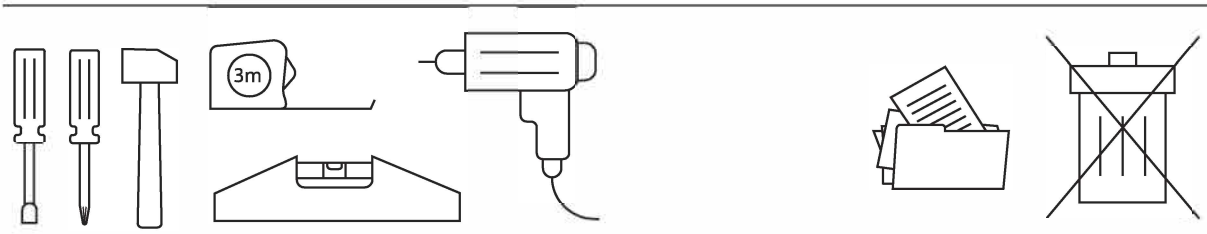
3m

min
max
min
max

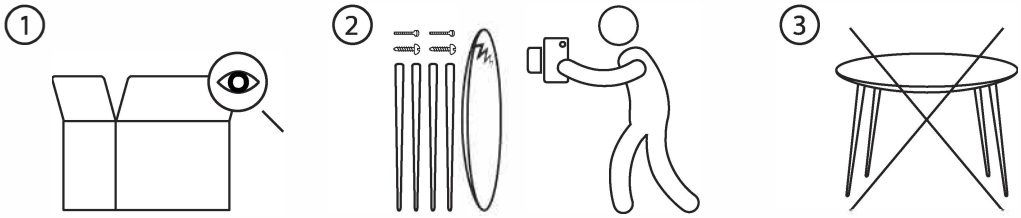
1
2
3

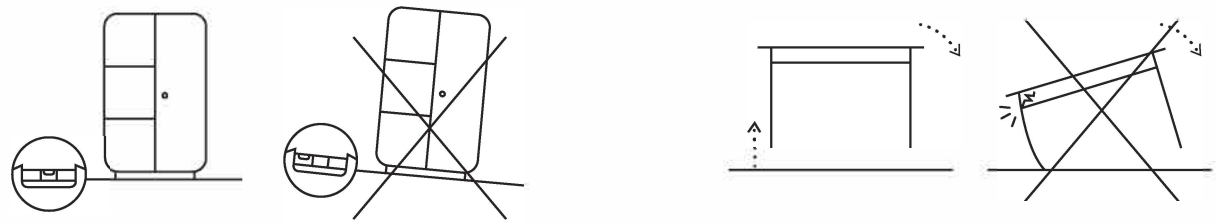

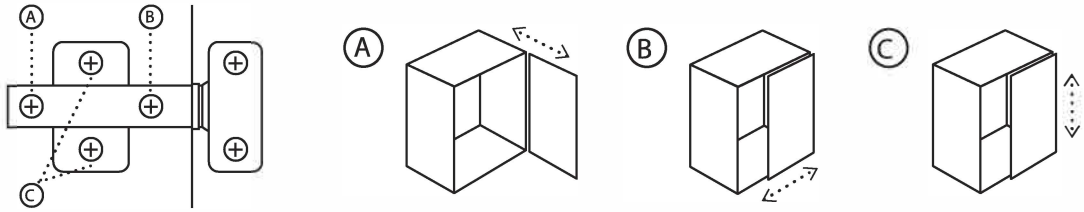
A
B
C
A
B
C

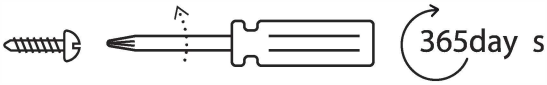
365day s

45 min

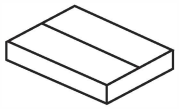

x2

x2

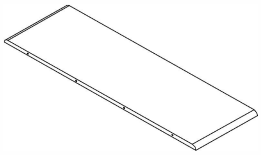

A x1

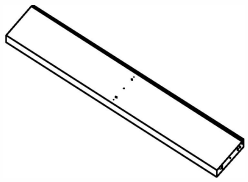

B x1

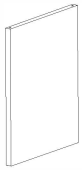

C x1

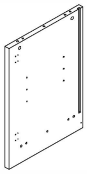

D x1

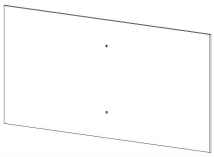

E x1

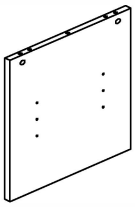

F x1

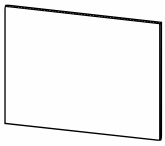

G x2

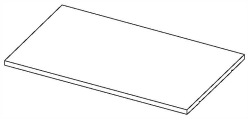

H x2

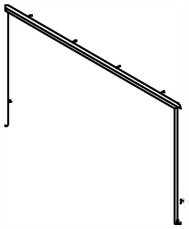

I x1

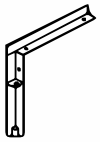

J x1

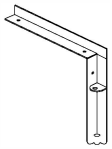

K x1

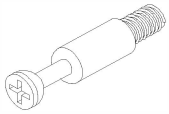

L x10

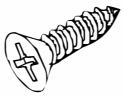

M x24

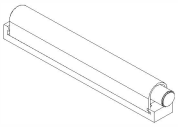

N x2

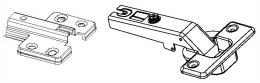

O x4

P x14

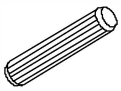

Q x17

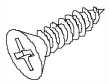

R x8

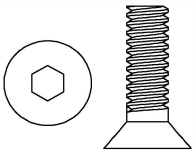

S x4

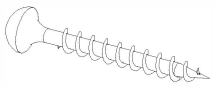

T x5

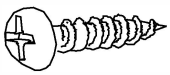

U x8

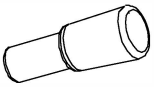

V x8

W x1

1

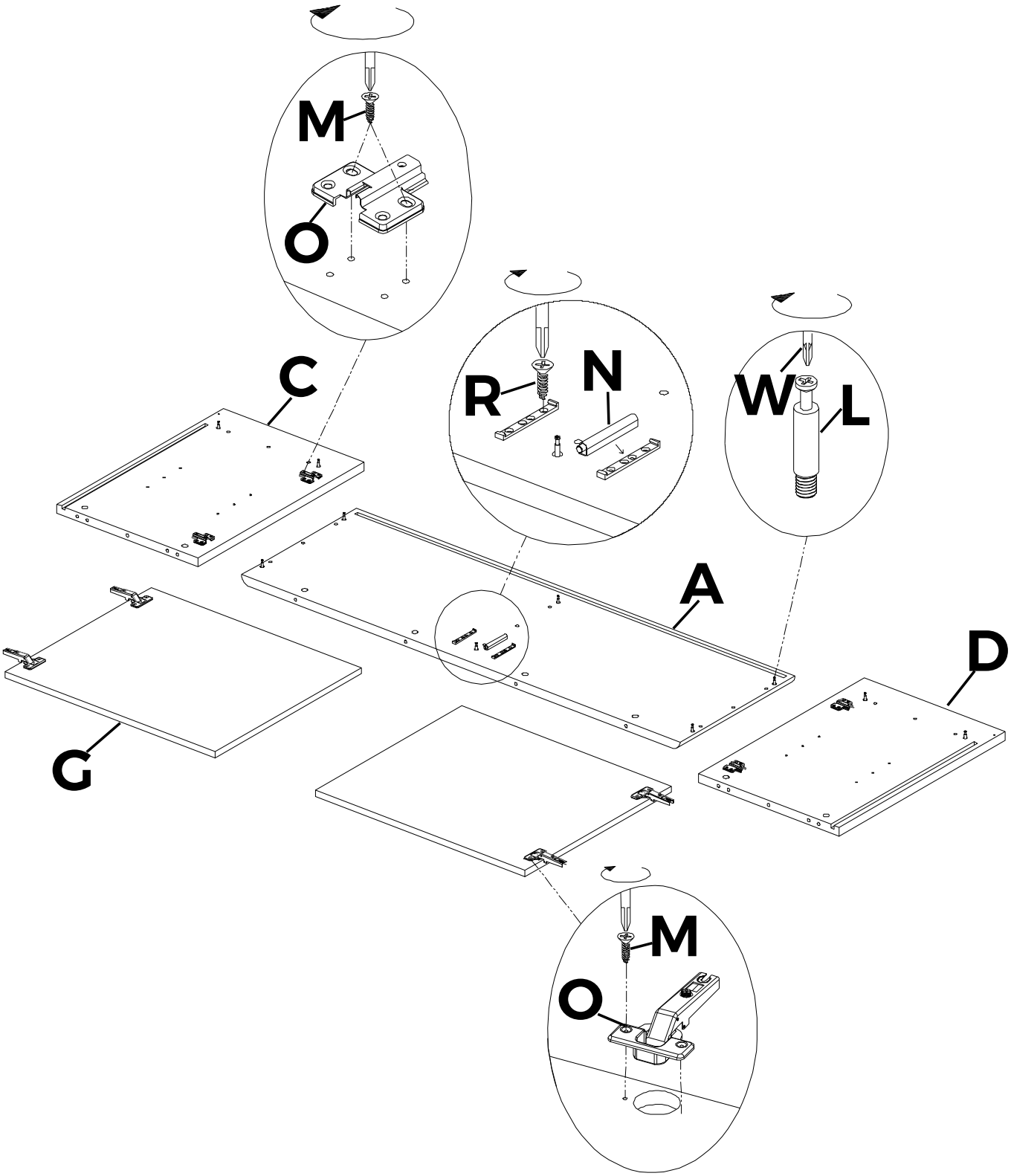

2

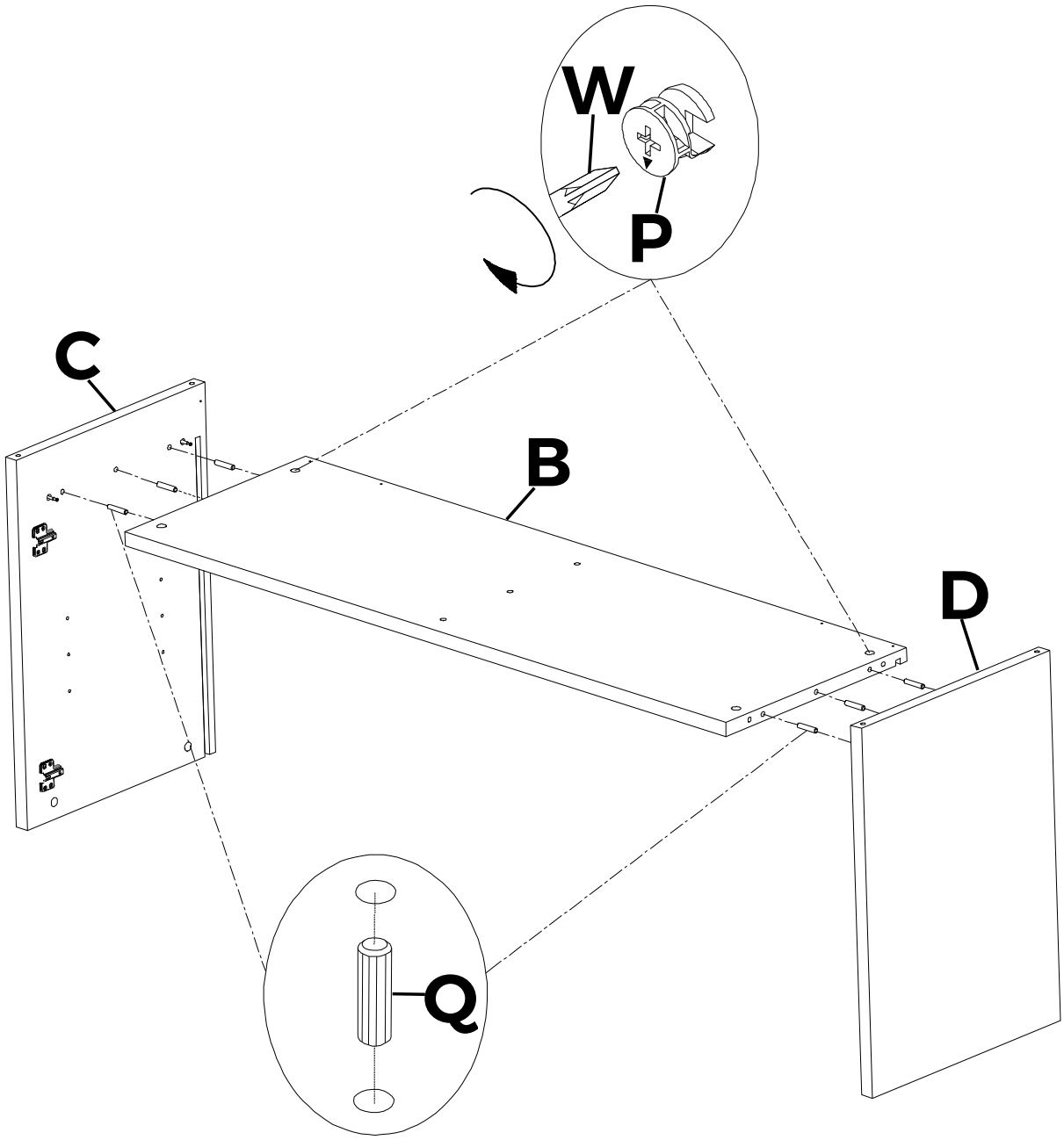

3

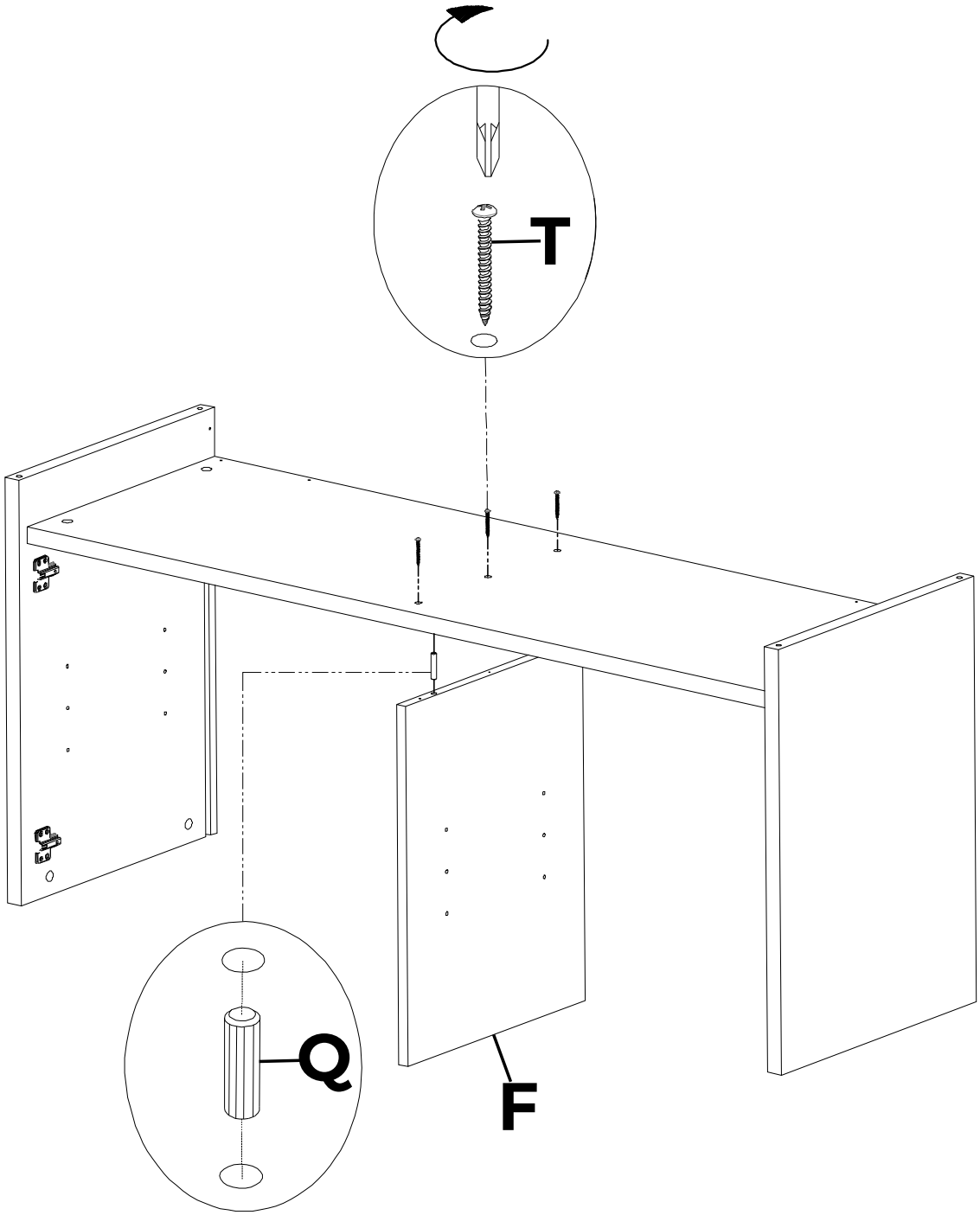

4

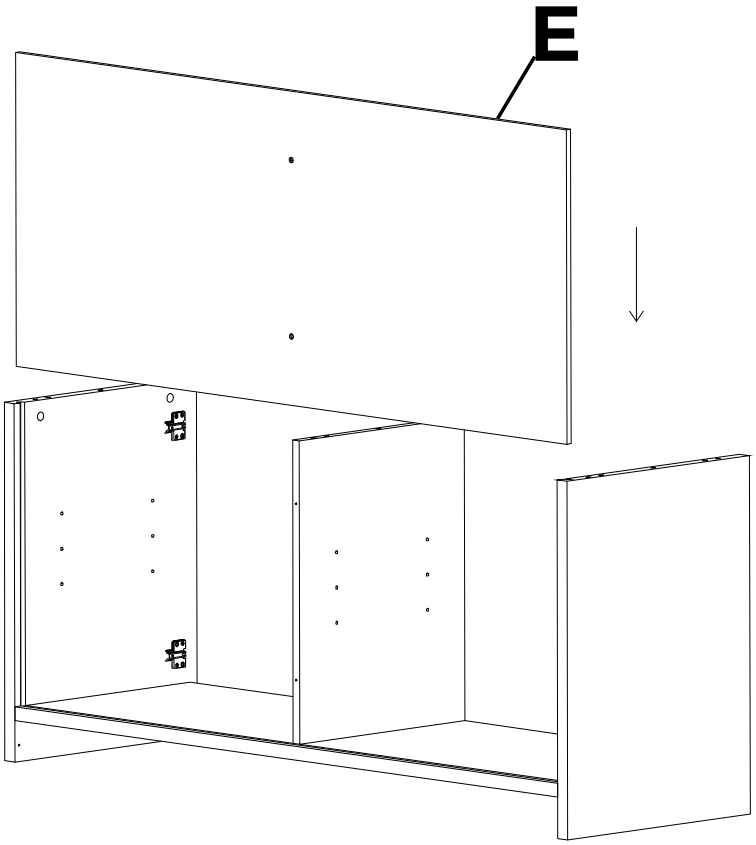

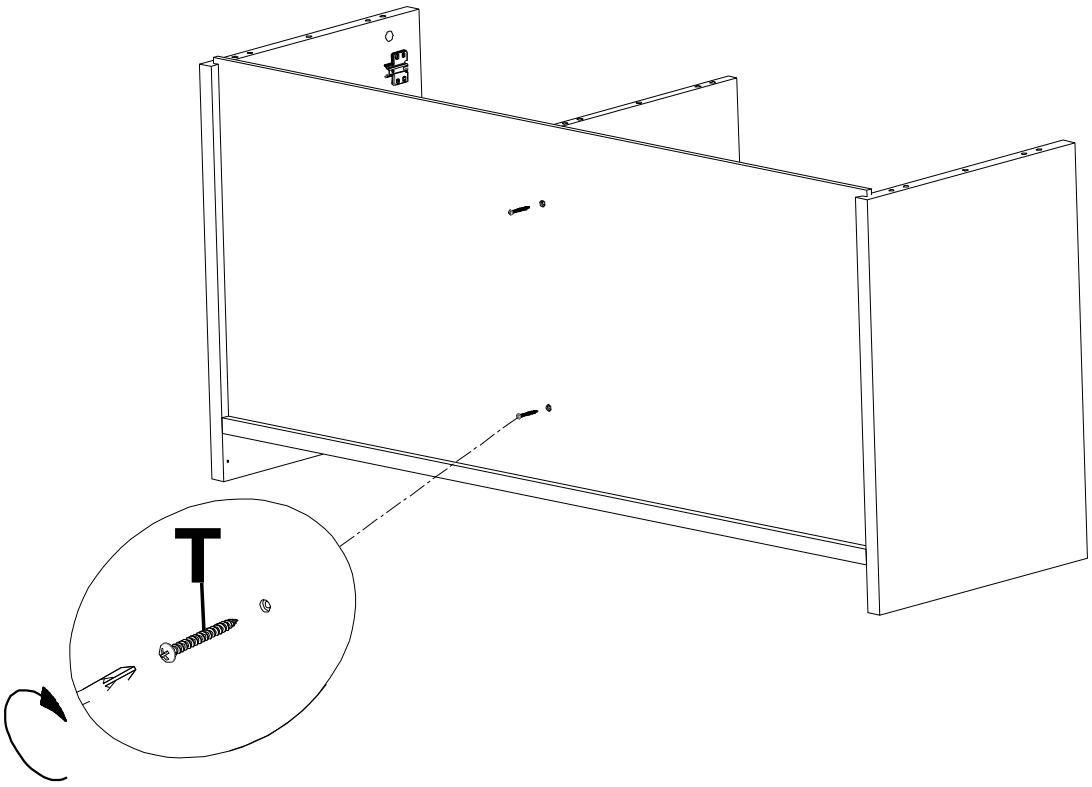

5

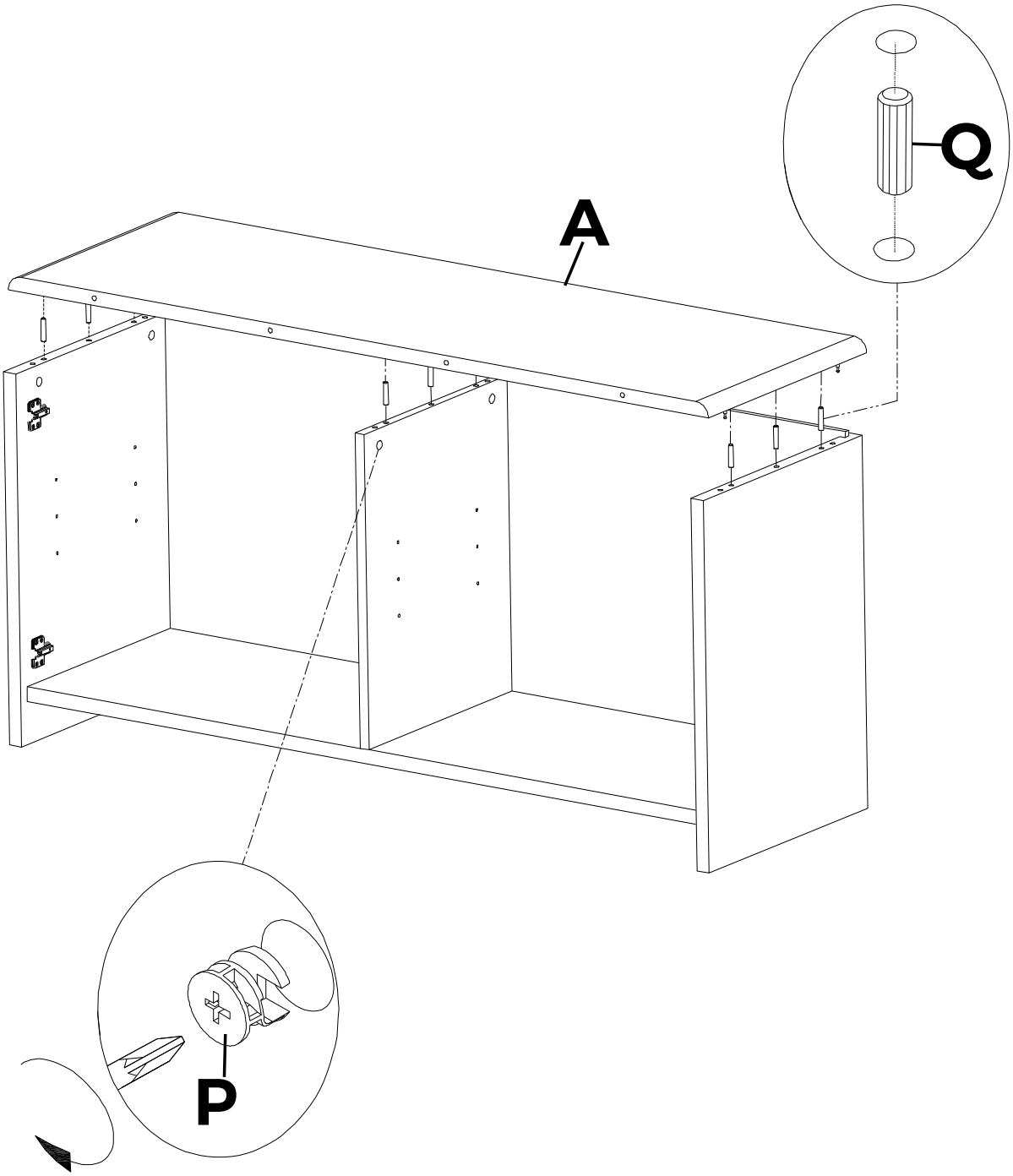

6

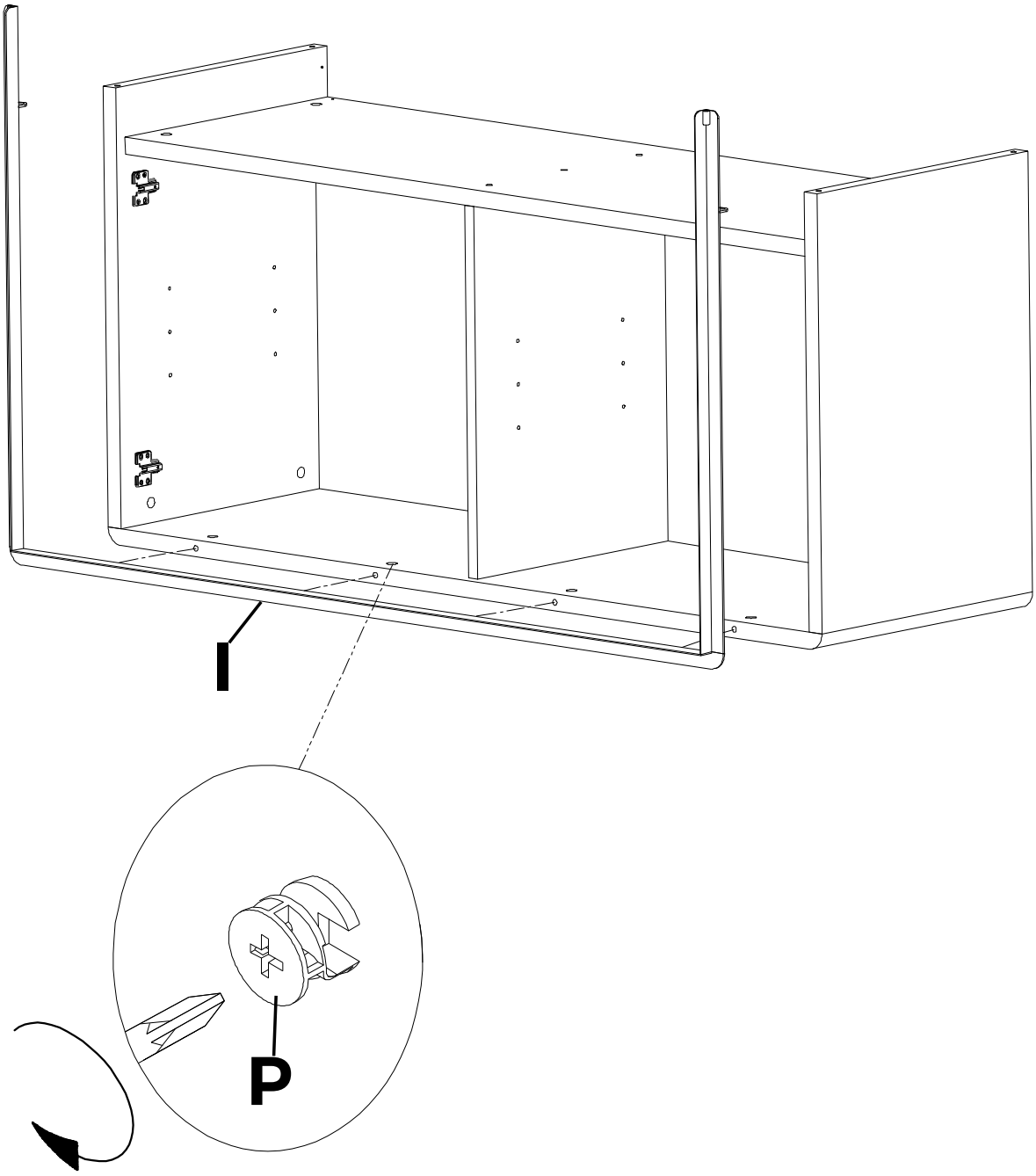

7

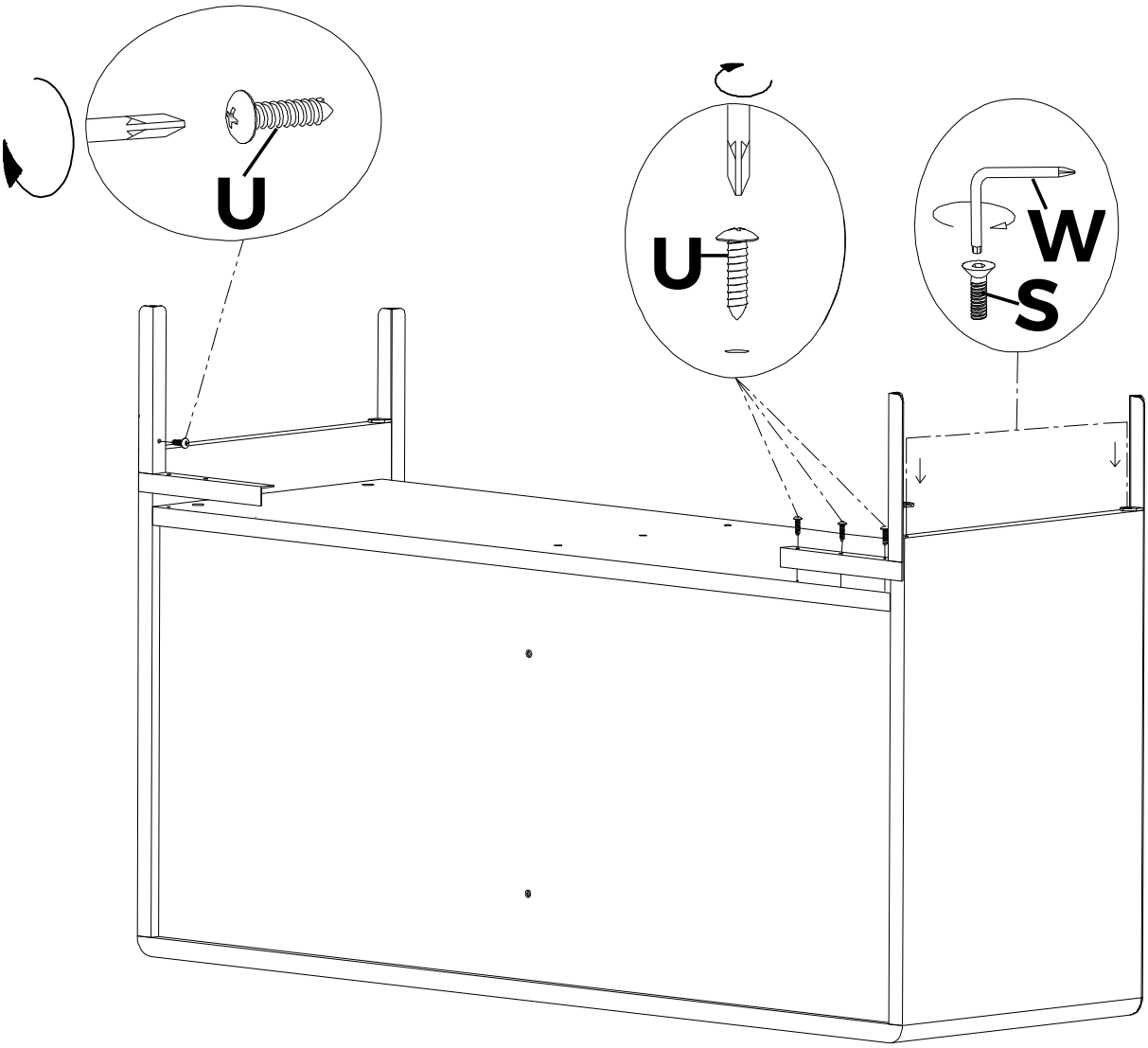

8

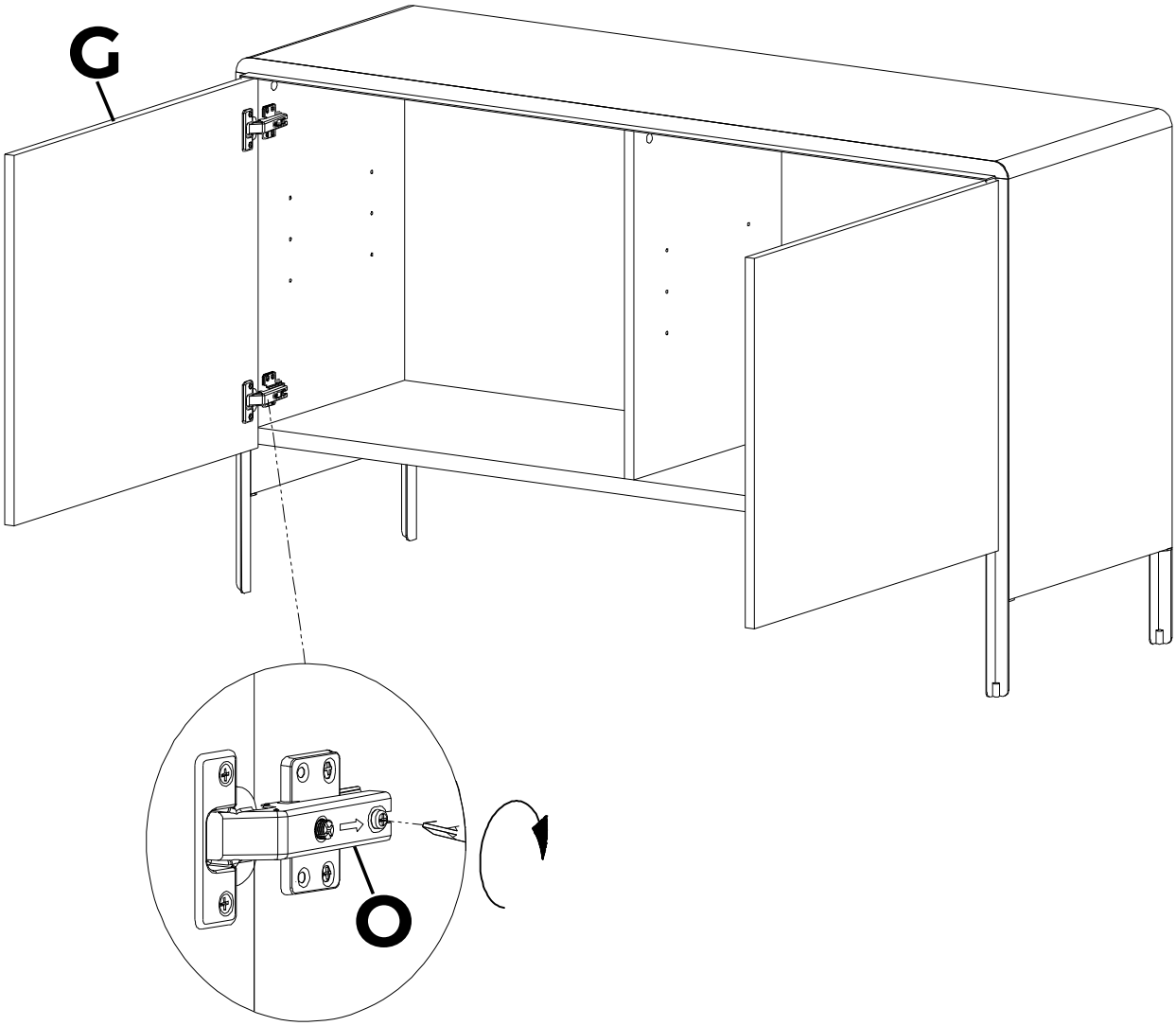

9

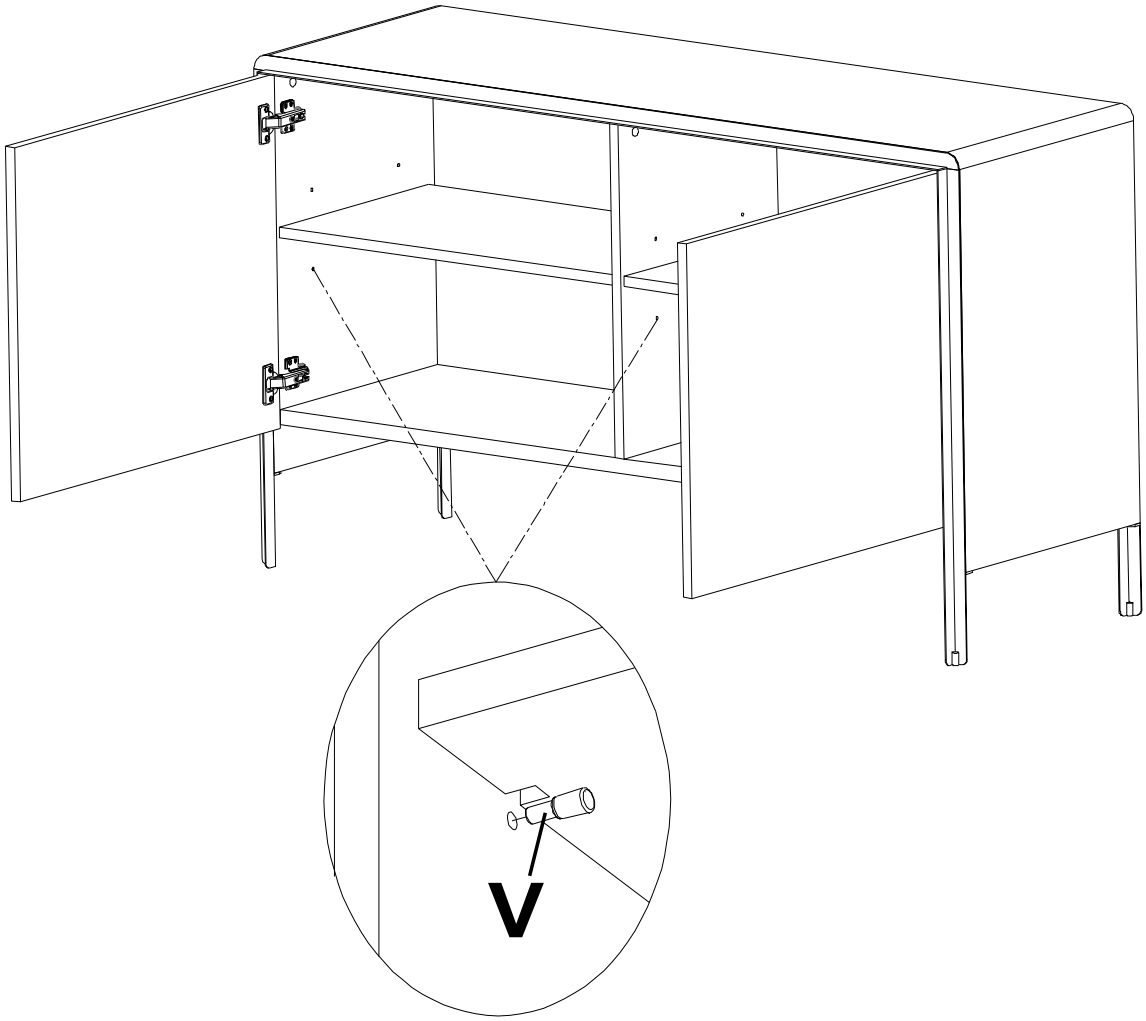

10

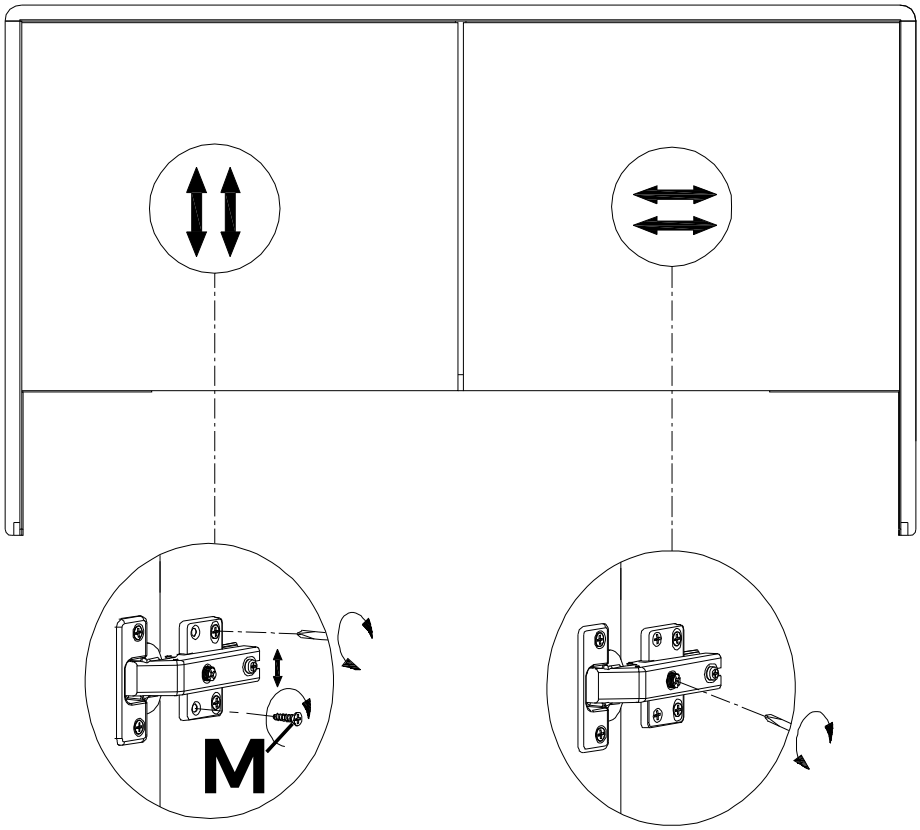

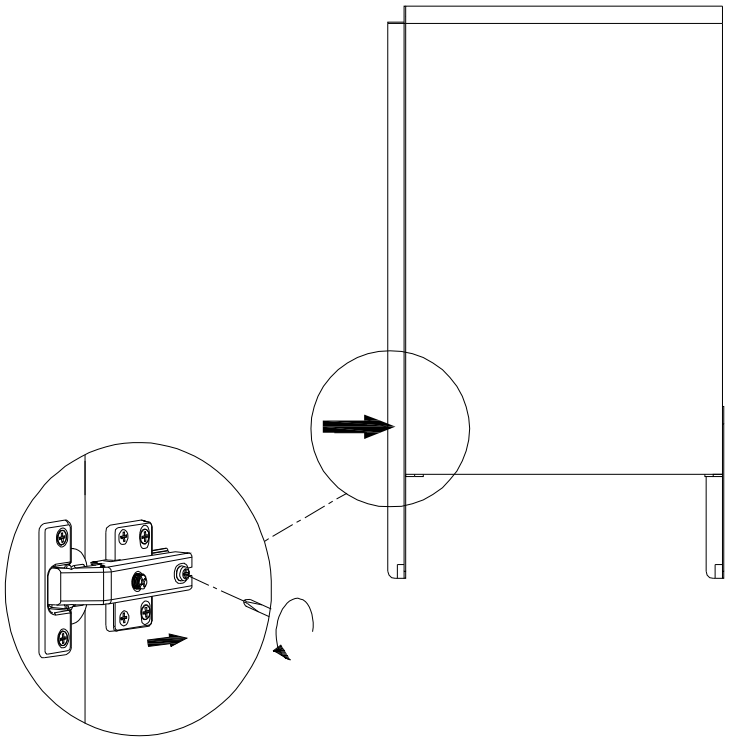

11

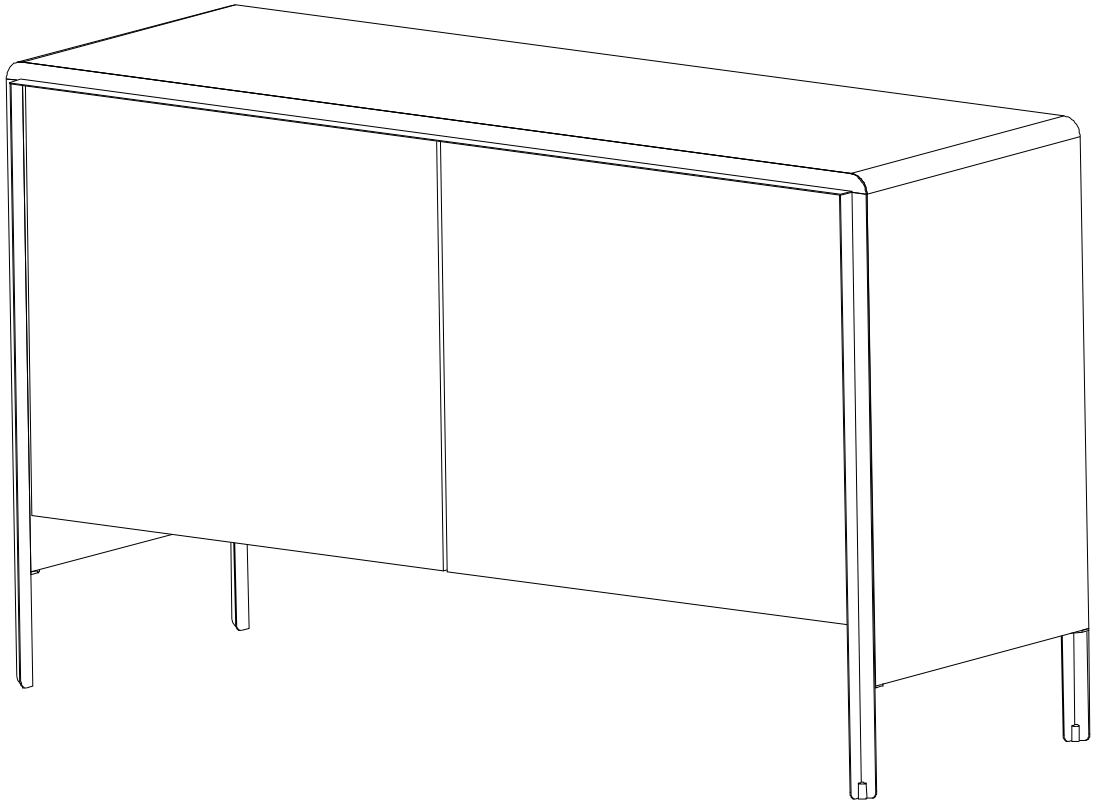

THAT'S ALL FOLKS!

JULIÀ GRUP Furniture Solutions S.L.
B-17616277
Pol. Ind. Bosc d’en Cuca
C / Tallers, 14
17410 Sils SPAIN
contact@kavehome.com